A PARAMETRIC DECOMPOSITION BASED APPROACH FOR MULTI-CLASS CLOSED QUEUING NETWORKS WITH SYNCHRONIZATION STATIONS

Kumar Satyam and Ananth Krishnamurthy*
Department of Decision Sciences and Engineering Systems,
Rensselaer Polytechnic Institute, 110 8th Street, Troy, NY-12180, USA
* *Phone: 1-518-2762958, E-mail: krisha@rpi.edu.*

Abstract

Multi-class closed queuing networks with synchronization stations find applications in analytical models of assembly systems and production systems operating under pull control policies. These queuing networks are hard to analyze exactly and therefore approximation methods must be used for performance evaluation. In this research we propose a new efficient approach based on parametric decomposition. Using recent developments in two-moment approximations for fork/join stations, we develop efficient algorithms for general multi-class closed queuing networks with synchronization stations. Numerical studies indicate that the proposed method is computationally efficient and yields fairly accurate results when compared to simulation.

Keywords: Multi-product systems, closed queuing network, fork/join stations, parametric decomposition, two-moment approximations, pull systems, CONWIP.

1 Introduction

Multi-class closed queuing networks with synchronization stations find applications in analytical queuing models of a wide variety of applications. In queuing models of assembly networks, fork/join stations are used to model the operations at kitting stations. At these stations, the components required for a particular assembly are grouped into a kit prior to release into the assembly line. In queuing models of manufacturing systems with palletized flow, fork/join stations are used to model the synchronization constraints between the material handling systems (pallets) and products. Queuing networks with fork/join stations also find applications in analytical models of computer systems with parallel processing. The research in this paper is motivated by different application – the analysis multiple product manufacturing systems operating under different pull control strategies such as generalized kanban and CONWIP. In these systems, a fixed number of cards (or kanbans) regulate the flow of products at various stations and limit work in process (WIP) inventories in the system. The fork/join stations are used model the synchronization constraints imposed on products, cards and customer demands.

The state space explosion phenomena limits the use of Markov chain based approaches to analyze the performance of closed queuing networks with synchronization stations. To overcome this computational complexity recent studies such as Kreig and Kuhn (6) have used decomposition methods to analyze queuing models of kanban systems with multiple products. While their approach yields good estimates of system performance, it requires that service times at the different stations in the network be exponentially distributed. Prior studies such as Duri et al. (3) use product form approximations to analyze queuing models of multi-product kanban systems. The key idea behind their approach is to approximate the performance of stations with general service times having general distribution by those having load dependent exponential service times. Other studies such as Ryan and Choobineh (9) analyze queuing models of multi-product systems operating under CONWIP control by solving a set of complex non-linear equations. This research is similar

to these prior studies efforts in two ways. First, this research also focuses on developing efficient approaches to evaluate performance of multi-product systems with synchronization stations. In particular, we focus on queuing networks models of system operating under pull control. Second, the aim is to develop a general approach that can be applied in different settings.

However unlike prior approaches, our approach is based on parametric decomposition and two moment approximations. This approach uses traffic process approximations instead of approximating the service process by load dependent servers. Previous studies such as Whitt (11) and Bitran and Tirupati (1) have used parametric decomposition based approaches to the develop efficient algorithms for the analysis of multi-class *open* queuing networks in general settings. However applications of the parametric decomposition approach in the analysis of closed queuing networks with synchronization stations are limited. The main reason being that a key building block, namely two-moment approximations for synchronization stations were not available. Using recently developed two-moment approximations for fork/join synchronization stations (7), (8), the authors have recently proposed parametric decomposition based algorithms for closed queuing networks. Satyam et al. (10) use an approach similar to that proposed in Kamath et al. (4) to develop efficient algorithms for multi-class closed queuing networks. However that work does not consider queuing networks with synchronization stations. Parametric decomposition based approaches for closed queuing networks with synchronization station have been proposed by Krishnamurthy and Suri (8). However, their work is restricted to networks with single class of customers. This research presents an important extension to both Satyam et al. (10) and Krishnamurthy and Suri (8) in that we develop a parametric decomposition based approach to analyze multi-class closed queuing network with synchronization stations. The approach is based on renewal approximations for the traffic process in the closed queuing networks and uses two moment approximations to characterize the performance measures at the different stations. Therefore the approach is applicable in a wide variety of settings. In addition, the algorithms developed in this research are relatively fast to execute and provide fairly accurate estimates of system performance enabling their use in decision tools that support managerial decisions. Due to space restrictions, the discussion in this paper is motivated by analysis of systems operating under CONWIP control. However, the approach can be extended to more general settings.

The remainder of the paper is organized as follows. Section 2 describes the queuing model of multi-product system with fork/join synchronization stations operating under CONWIP control. Section 3 discusses the analysis approach. The approach is based on parametric decomposition and the key steps: *characterization*, *linkage* and *solution* are discussed in subsections 3.1 to 3.4. Results of numerical studies conducted are summarized in Section 4 and conclusions are presented in Section 5.

2 System Model

Figure 1 shows the queuing model of a multi-product manufacturing system operating under CONWIP control. We assume that the system manufactures R products and that each product undergoes processing at one or more of the M manufacturing station in the system. The routing for each product type is pre-specified and deterministic. Using this information, for each station $m(m = 1,\ldots,M)$ we identify the set V_m that lists the products that get routed through the station. For the simplicity of exposition, we assume that each manufacturing station is comprised of a single server station with general service times. Since the system operates under CONWIP control, corresponding to each product r, there are K_r cards in the system that limit the work in process inventory of type-r products. The fork/join stations $J_{r,i}, i = 0,1, r = 1,\ldots,R$ model synchronization constraints between products, cards, and customer demands. Each fork/join station $J_{r,i}$ has two input queues, $P_{r,i}$ and $F_{r,i+1}$. At station $J_{r,0}$, the raw material in queue $P_{r,0}$ and card in queue $F_{r,1}$ are joined together as one entity and released into the manufacturing system. The product undergoes processing

at the different stations in the manufacturing system and then queues in the finished goods buffer denoted by the queue $P_{r,1}$ at fork/join station $J_{r,1}$. At $J_{r,1}$ customer demands in queue $F_{r,2}$ and finished products from $P_{r,1}$ join together and exit the system. Simultaneously, the card attached to the finished product is released and sent back to queue $F_{r,1}$.

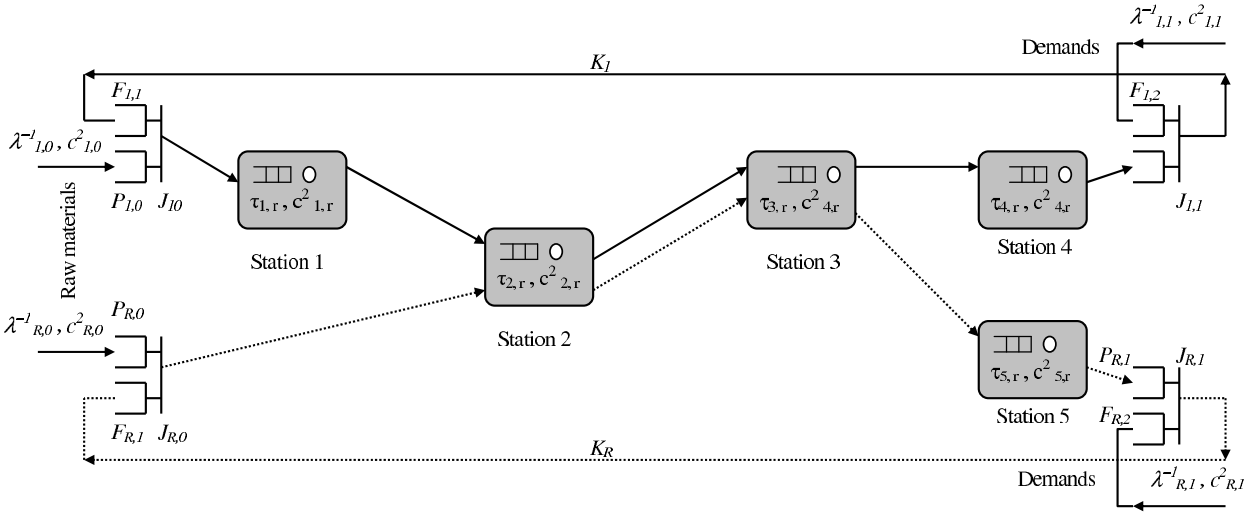

Figure 1: Queuing model of multi-product system with fork/join stations (Note that the routing for only two product types, type-1 and type-R are shown in the figure)

3 Analysis Approach

The system shown in Figure 1 can be viewed as a closed queuing network with the product specific cards acting as multiple classes of customers and the raw material and the external demands imposing as external synchronization constraints. The underlying characteristics make the network non-product form implying that approximate methods must be used for performance evaluation. We propose a new efficient approach based on parametric decomposition. The approach consists of four main steps: decomposition, characterization, linkage and solution.

1. *Decomposition:* The closed queuing network is first decomposed into its constituent stations or nodes. This yields M manufacturing stations, R upstream fork/join stations, and R downstream fork/join stations. It is to be noted that each manufacturing station m potentially serves multiple product types, while, each fork/join station is dedicated to a particular product type, r.

2. *Characterization:* In the characterization step, each node (manufacturing and fork/join station) obtained from decomposition is analyzed in isolation assuming that (i) the arrival and service process at the node is renewal, and that (ii) the arrival (service) process can be characterized by the mean and SCV of the inter-arrival (service) times respectively. Not that this implies that the departure process from each node is also assumed to be renewal and that the inter-departure times are characterized by its mean and SCV. Based on the analysis of the nodes in isolation, two moment-approximations are derived for the mean and SCV parameter of the inter-departure times, throughput, and the mean queue length(s) at each node. Note that the parameters characterizing the service process at each manufacturing station m, the raw material arrival process (at $J_{r,0}$), and demand arrival process (at $J_{r,1}$) for each product type-r are inputs for this analysis.

3. *Linkage:* In the linkage step, known relationships linking the traffic processes in a closed queuing network are used to derive equations that relate the parameters characterizing the departure and arrival processes at the different nodes. Finally, Little's law is applied to the entire network to ensure that the

sum of the average queue lengths of cards of type-r cards at the different stations equal the network population, K_r. This leads to a set of nonlinear equations in the unknown traffic process parameters of the network.

4. *Solution:* In the solution step, the system of non-linear equations is solved using an iterative algorithm which stops when successive iterations yield parameter estimates that are close enough. Estimates of the various performance metrics such as the system throughput, mean waiting times and queue lengths at the different nodes are easily determined from this solution.

3.1 Characterization of Manufacturing Stations

In the parametric decomposition approach, the performance of each manufacturing station m, in the network is analyzed in isolation assuming that the arrival and service process of products of type-r ($r \in V_m$) are renewal. We further assume that ($\lambda_{a_{r,m}}^{-1}$, $c_{a_{r,m}}^2$) and ($\tau_{r,m}$, $c_{s_{r,m}}^2$) denote the mean and SCV of the inter-arrival and service times of product type-r at station m respectively. Then the inputs to the manufacturing station m in the closed queuing network is characterized by the parameter tuple ($\lambda_{a_{r,m}}^{-1}$, $c_{a_{r,m}}^2$, $\tau_{r,m}$, $c_{s_{r,m}}^2$, K_r) for $r = 1, \ldots, R$. Assuming that this input information is known station m is analyzed to derive expressions for the mean (SCV) of the inter-departure times, $\lambda_{d_{r,m}}^{-1}$ ($c_{d_{r,m}}^2$), the mean queue length, $\bar{L}_{r,m}$, for each product type-r at station m. These expressions are derived using an analysis similar to that used for the analysis of open queuing networks in Whitt (11). The basic idea is to define an aggregate product at each station m. The arrival process of this aggregate product at station m corresponds to the superposition of the arrival process of the products routed through this station. This arrival process is also assumed to be renewal and we let $\lambda_{a_m}^{-1}$ and $c_{a_m}^2$ denote the mean and SCV of the inter-arrival times of the aggregate product at station m. Similarly, the service times of the aggregate product are also assumed to be *i.i.d* with mean τ_m and SCV, $c_{s_m}^2$. Then, $\lambda_{a_m}^{-1}$ and τ_m are given by

$$\lambda_{a_m}^{-1} = \left(\sum_{r \in V_m} \lambda_{a_{r,m}} \right)^{-1} \tag{1}$$

$$\tau_m = (\lambda_{a_m}^{-1}) \sum_{r \in V_m} \lambda_{a_{r,m}} \tau_{r,m} \tag{2}$$

If $\rho_{r,m} = \lambda_{a_{r,m}} \tau_{r,m}$ denotes the station utilization by product type-r, and $\rho_m = \lambda_{a_m} \tau_m$ denotes the overall utilization of station m, then using the results of the analysis in Whitt (11) and Bitran and Tirupati (1) expressions for $c_{s_m}^2$ and $c_{a_m}^2$ are written as follows:

$$c_{s_m}^2 + 1 = (1/\lambda_{a_m} \tau_m^2) \sum_{r \in V_m} \lambda_{a_{r,m}} (c_{s_{r,m}}^2 + 1) \tau_{r,m}^2 \tag{3}$$

$$c_{a_m}^2 = \omega \bar{c}^2 + (1 - \omega) \tag{4}$$

where $\bar{c}^2 = \sum_{r \in V_m} (\lambda_{a_{r,m}} / \lambda_{a_m}) c_{a_{r,m}}^2$, $\omega^{-1} = [1 + 4(1 - \rho_m)^2](\nu - 1)$ and $\nu^{-1} = \sum_{r \in V_m} (\lambda_{a_{r,m}} / \lambda_{a_m})^2$. Similarly, the mean, λ_{d_m} and SCV, $c_{d_m}^2$ of the inter-departure times are written as

$$\lambda_{d_m} = \lambda_{a_m} \tag{5}$$

$$c_{d_m}^2 = (1 - \rho_m^2) c_{a_m}^2 + \rho_m^2 c_{s_{r,m}}^2 \tag{6}$$

Further, if $\bar{W}_{q,m}$ denotes the mean waiting time in queue for the aggregate product at station m, then the mean queue length at station m is given by:

$$\bar{L}_m = \lambda_{a_{r,m}} \bar{W}_{q,m} + \rho_m \tag{7}$$

Using performance estimates of the aggregate product, expressions for the performance measures of individual product at station m can be written as follows:

$$\lambda_{d_{r,m}} = \lambda_{a_{r,m}} \tag{8}$$

$$c^2_{d_{r,m}} = \rho^2_{r,m} c^2_{s_{r,m}} + p_r \sum_{\substack{j \in V_m \\ j \neq r}} \frac{\rho^2_{j,m}}{p_j} (c^2_{s_{j,m}} + c^2_{a_{j,m}}) + (1 - 2\rho_{r,m}\rho_m + \rho^2_{r,m}) c^2_{a_{r,m}} \tag{9}$$

$$\bar{L}_{r,m} = \lambda_{a_{r,m}} \bar{W}_{q,m} + \rho_{r,m} \quad \forall r, \forall m \tag{10}$$

where, $p_r = \lambda_{a_{r,m}}/\lambda_{a_m}$, $\bar{L}_r = \sum_{j=1}^{M} \bar{L}_{r,j}, \forall r$, and $\bar{L}_m = \sum_{r \in V_m} \bar{L}_{r,j}, \forall m$. Thus far, the characterization equations closely follow the open queuing network analysis in Whitt (11) and Bitran and Tirupati (1). The key difference between the open and closed queuing network analysis lies in the determination of the mean waiting time, $\bar{W}_{q,m}$. Since each station m is part of a closed queuing network, $\bar{W}_{q,m}$ is a function of $\lambda_{a_{r,m}}$, $\tau_{r,m}$, $c^2_{s_{r,m}}$, $c^2_{a_{r,m}}$ and K_r of all products r at the different stations i.e.:

$$\bar{W}_{q,m} = g(\lambda_{a_m}, \tau_m, c^2_{s_m}, c^2_{a_m}, K_r, \forall r, m) \tag{11}$$

Since the network is non-product form, the function g can be quite complex. Hence, we use an approximation and write g as the product of two terms, $\bar{W}^{GI/G/1}_{q,m}$ and f_m. The term $\bar{W}^{GI/G/1}_{q,m}$ corresponds to the mean waiting time in an open $GI/G/1$ queue characterized by the parameter tuple for the aggregate product at station m, namely $\left(\lambda_{a_m}, \tau_m, c^2_{s_m}, c^2_{a_m}\right)$ and the term f_m accounts for the finite population of the closed queuing network. In other words, we write

$$\begin{aligned} \bar{W}_{q,m} &= f_m \times \bar{W}^{GI/G/1}_{q,m} \left(\lambda_{a_m}, \tau_m, c^2_{s_m}, c^2_{a_m}\right) \\ &= f_m \left(\frac{\tau_m \rho_m}{1 - \rho_m}\right) \left(\frac{c^2_{s_m} + c^2_{a_m}}{2}\right) \end{aligned} \tag{12}$$

In general, the determination of $f_m, m = 1, \ldots, M$ can be as complex as solving the original network. However for a given network, a good estimate of f_m can be determined using the following approach. Corresponding to each product type-r a single class product form closed queuing network $C^{(r)}$ is identified. The stations in $C^{(r)}$ correspond to those visited by type-r products in the original network. The service times at a station m in $C^{(r)}$ is assumed to be exponentially distributed with mean $\tilde{\tau}_{r,m} = \tau_{r,m}/\left(1 - \sum_{k \in S_k, k \neq r} \tilde{\rho}_{k,m}\right)$, where $\tilde{\rho}_{k,m} = \tilde{\lambda}_{k,m}\tilde{\tau}_{k,m}$, and $\tilde{\lambda}_{k,m}$ is the throughput of the closed queuing network $C^{(k)}$. Since each network, $C^{(k)}$ is product form, it is analyzed using a procedure such as convolution or mean value analysis and the waiting time, $\tilde{W}^{C,(k)}_{qm}$ at each station m in $C^{(k)}$ is obtained. Next, if $\tilde{W}^{O,(k)}_{qm}$ denotes the mean waiting time in queue at an $M/M/1$ queue with arrivals at rate $\tilde{\lambda}_{k,m}$ and exponential service times with mean service time $\tilde{\tau}_{k,m}$, then we write

$$f_m = \frac{\tilde{W}^{C,(k)}_{qm}}{\tilde{W}^{O,(k)}_{qm}} = \tilde{W}^{C,(k)}_{qm} \left(\frac{1 - \tilde{\lambda}_{k,m}\tilde{\tau}_{k,m}}{\tilde{\lambda}_{k,m}\tilde{\tau}^2_{k,m}}\right) \qquad \forall k, m \tag{13}$$

3.2 Characterization of Fork/Join Stations

To analyze the performance of each fork/join station, $J_{r,i}$ in isolation we assume that the arrivals to queues $P_{r,i}$ and $F_{r,i+1}$ are independent renewal processes. Further, we assume that the inter-arrival times to queue $P_{r,i}(F_{r,i+1})$ have mean $\lambda^{-1}_{P_{r,i}}$ ($\lambda^{-1}_{F_{r,i+1}}$)and SCV $c^2_{P_{r,i}}$ ($c^2_{F_{r,i+1}}$) respectively. To better model the behavior of the fork/join station in the original closed queuing network, we need to assume that the arrival process to queue $P_{r,i}(F_{r,i+1})$ shuts down temporarily when it has $K_{r,i}(K_{r,i+1})$ units. Therefore, the inputs for the analysis of the fork/join station $J_{r,i}$ correspond to the parameter 6-tuple $(\lambda_{P_{r,i}}, c^2_{P_{r,i}}, K_{r,i}, \lambda_{F_{r,i+1}}, c^2_{F_{r,i+1}}, K_{r,i+1})$. Assuming that

these inputs are known, expressions for the mean ($\lambda_{D_{r,i}}$) and SCV ($c^2_{D_{r,i}}$) of the inter-departure times, and the mean queue lengths ($\bar{L}_{P_{r,i}}$ and $\bar{L}_{F_{r,i+1}}$) at $P_{r,i}$ and $F_{r,i+1}$ respectively are written using the results presented in Krishnamurthy et al. (7). For notational simplicity, we define $w_{r,i} = \lambda_{P_{r,i}}/\lambda_{F_{r,i+1}}$, $c^2_{r,i} = 0.5(c^2_{P_{r,i}} + c^2_{F_{r,i+1}})$ and $v_{r,i} = [(1-w_{r,i})w^4_{r,i}]/[(1+w_{r,i})(1+w^8_{r,i})]$.

$$\lambda_{D_{r,i}} = \lambda_{P_{r,i}} \left[\frac{1-w_{r,i}^{K_{r,i}+K_{r,i+1}}}{1-w_{r,i}^{K_{r,i}+K_{r,i+1}+1}} \right] \left[1 - 0.5(c^2_{r,i}-1) \left(\frac{(1-w_{r,i})w_{r,i}^{K_{r,i}+K_{r,i+1}}}{1-w_{r,i}^{2(K_{r,i}+K_{r,i+1})+1}} \right) \right] \tag{14}$$

$$\bar{L}_{P_{r,i}} = \left[\left(\frac{w_{r,i}^{K_{r,i+1}+1}}{1-w_{r,i}} \right) \left(\frac{1-w_{r,i}^{K_{r,i}}}{1-w_{r,i}^{K_{r,i}+K_{r,i+1}+1}} \right) - \left(\frac{K_{r,i}w_{r,i}^{K_{r,i}+K_{r,i+1}+1}}{1-w_{r,i}^{K_{r,i}+K_{r,i+1}+1}} \right) \right] \left[1 + v_{r,i}(c^2_{r,i}-1) \right] \tag{15}$$

$$\bar{L}_{F_{r,i+1}} = \left[\left(\frac{K_{r,i+1}}{1-w_{r,i}^{K_{r,i}+K_{r,i+1}+1}} \right) - \left(\frac{w_{r,i}}{1-w_{r,i}} \right) \left(\frac{1-w_{r,i}^{K_{r,i+1}}}{1-w_{r,i}^{K_{r,i}+K_{r,i+1}+1}} \right) \right] \left[1 - v_{r,i}(c^2_{r,i}-1) \right] \tag{16}$$

$$c^2_{D_{r,i}} = \left[\left(\frac{w^5_{r,i}c^2_{F_{r,i+1}}}{w^5_{r,i}+1} \right) + \left(\frac{c^2_{P_{r,i}}}{w^5_{r,i}+1} \right) \right] \left[1 - \frac{1}{K_{r,i}+K_{r,i+1}+1} - \frac{1}{(K_{r,i}+K_{r,i+1}+1)^2} \right] \left[1 + w^2_{r,i} \right]^{-1/2} \tag{17}$$

3.3 Linkage

In the characterization step the nodes in the network (manufacturing and synchronization stations) were analyzed in isolation and expressions for performance measures were obtained assuming that the parameters of the arrival and service processes at the different nodes are known. In general, not all the parameters characterizing the different arrival processes are known. The relationships between these unknown parameters are identified in the linking step. The traffic processes at the nodes are linked together using the routing information for each product type in the network. In particular, four types of node linkages need to be considered: (i) linking the departure process from fork/join station $J_{r,0}$ to the arrival process at a manufacturing station m, (ii) linking the departure process from manufacturing station m to the arrival process at manufacturing station n, $n \neq m$, (iii) linking the departure process from manufacturing station m to the arrival process at buffer $P_{r,1}$ of the fork/join station $J_{r,1}$, and (iii) linking the departure process from fork/join station $J_{r,1}$ to the arrival process at buffer $F_{r,1}$ of the fork/join station $J_{r,0}$. The stochastic transformation equations for these linkages are obtained using an approach similar to that presented in Krishnamurthy and Suri (8). The details are omitted due to space constraints. Finally, Little's law is applied to the entire network to obtain

$$\bar{L_r} = \sum_{j=1}^{M} \bar{L}_{r,j} = K_r \quad \forall r \tag{18}$$

This results in a set of non-linear equations in the set of unknown parameters defining the traffic processes in the closed queuing network.

3.4 Solution

In the solution step, the set of non-linear equations is solved to determine the network throughput, λ_r for each product type-r. Note that $\lambda_r = \lambda_{d_{r,m}}$, for all stations m in the routing for product r. The solution algorithm starts with an initial estimate of the throughput for each product type and progressively updates the estimates of the different traffic process parameters until they converge and are consistent with the input parameters. In order to improve the efficiency of this iterative method, the search for each λ_r is restricted between the lower bound λ_r^{LB} and upper bound λ_r^{UB} derived using the results given in Kant (5). The quasi-Newton search using Broyden's method (2) is used to improve the efficiency of the search for the solution within the identified bounds.

4 Numerical Results

The performance of the algorithm was tested against several numerical examples obtained by varying the number of products R, the number of WIP cards K_r, the mean processing times $\tau_{r,m}$, the SCV $c^2_{s\,r,m}$, the inter-arrival time of demand $\lambda^{-1}_{r,1}$ and the SCV of demand $c^2_{r,1}$. In these experiments both high and low values of the different SCV parameters (SCV=2.0 and SCV=0.7) were considered. The results were compared to exact values obtained from simulation experiments obtained from a model built using PROMODEL (12) and the absolute percentage error in throughput and mean queue lengths recorded. The results indicated that in more than 95% of the cases the error in throughput (mean queue length) estimate was less than 5% (7%). In all the cases, the algorithm converged to a solution within a few seconds. A sample of result for a CONWIP system with $M = 3$, $R = 3$ is presented in Table 1. For the results presented, we assume that $V_m = \{1, \ldots, R\}$ for all m.

Table 1: Sample results –A: Analytical; S: Simulation, E: % Error
$\mu_{r,m} = \lambda_{r,0} = 6,\ c^2_{s_{r,m}} = c^2_{r,0} = c^2_{r,1} = 0.7,\ K_{r,0} = K_{r,1} = 4, \forall r$ and
$\lambda_{1,1} = \lambda_{2,1} = \lambda_{3,1} = \lambda_{r,1}$

(K_1, K_2, K_3)	$\lambda_{r,1}$		λ_1	λ_2	λ_3	$L_{1,2}$	$L_{2,2}$	$L_{3,2}$
(4, 6, 5)	2.00	A	1.669	1.882	1.808	1.115	1.257	1.208
		S	1.611	1.931	1.825	1.276	1.583	1.474
		E	3.621	2.541	0.926	4.031	8.139	6.650
(6, 8, 9)	2.00	A	1.733	1.874	1.910	1.595	1.724	1.757
		S	1.680	1.904	1.952	1.851	2.152	2.223
		E	3.124	1.601	2.176	6.412	10.696	11.636
(4,4,4)	1.50	A	1.486	1.486	1.486	0.493	0.493	0.493
		S	1.490	1.491	1.495	0.687	0.686	0.688
		E	0.271	0.309	0.613	4.848	4.826	4.879
(4,4,4)	1.75	A	1.674	1.674	1.674	0.762	0.762	0.762
		S	1.683	1.678	1.680	1.019	1.016	1.020
		E	0.556	0.268	0.356	6.437	6.360	6.440

Figures 2 and 3 illustrate how the algorithm proposed here can be used to predict trends in performance measures for typical system configurations. Figure 2 shows the variation in system throughput with the number of WIP cards. The particular system configuration considered has $M = R = 3$, $\mu_{r,m} = \lambda_{r,0} = \lambda_{r,1} = 6$, $K_{r,0} = K_{r,1} = 4$ and SCVs ($c^2_{s_{r,m}} = c^2_{r,0} = c^2_{r,1}$) take values of 0.7 and 2. Figure 3 shows the distribution of mean queue length of the different products (product 2 and product 3) at a particular manufacturing station (station 2) for different WIP card settings (K_1, K_2, K_3). The system configuration has $M = R = 3$, $\mu_{r,m} = \lambda_{r,0} = \lambda_{r,1} = 6$, $c^2_{s_{r,m}} = c^2_{r,0} = c^2_{r,1} = 2$, and $K_{r,0} = K_{r,1} = 4$. From the graphs it can be seen that the analytical model predicts the trends in the throughput and mean queue length variations fairly well.

5 Conclusions

This paper presents a new efficient algorithm for the performance evaluation of multi-class closed queuing networks with fork/join synchronization stations. Although the discussion in this paper is presented by considering multi-product manufacturing systems operating under CONWIP control as an example, the approach can be generalized to other settings. Numerical experiments show that the method yields fairly accurate estimates of system performance and can therefore be used to analyze design tradeoffs. Our ongoing research efforts are aimed at extending the approach to more general class of queuing networks.

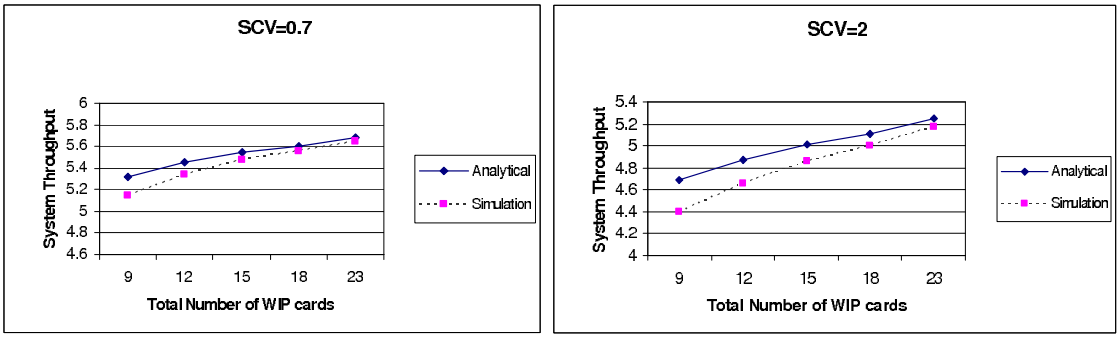

Figure 2: Variation of system throughput for different WIP limits

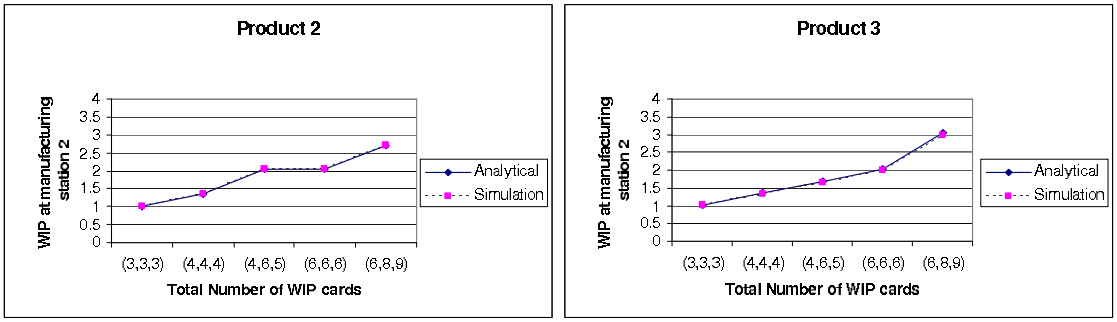

Figure 3: Variation in mean queue length at station 2 for different WIP card settings

References

[1] Bitran and Tirupathi, "Multiproduct queuing networks with deterministic routing:decomposition approach and the notion of interference," *Management Science*, vol. 34(1), pp. 75–100, 1988.

[2] R. L. Burden, J. D. Faires, and A. C. Reynolds, *Numerical Analysis*. PWS Publishers, 1981.

[3] C. Duri, Y. Frein, and M. D. Mascolo, "Performance evaluation of kanbanlike multi-product production systems," *Proceedings of 1995 INRIA/IEEE Symposium on Emerging Technologies and Factory Automation*, vol. 3(xi+709+603+580), pp. 557–566, 1995.

[4] M. Kamath, R. Suri, and J. L. Sanders, "Analytical perfromance models for closed-loop flexible manufacturing systems," *The International Journal of Flexible Manufacturing Systems*, vol. 1, pp. 51–84, 1988.

[5] K. Kant, *Introduction to Computer Systems Performance Evaluation*. McGrawHill, New York, NY, 1992.

[6] G. N. Kreig and H. Kuhn, "Analysis of multi-product kanban systems with state dependent setups and lost sales," *Annals of Operations Research*, vol. 125, pp. 141–166, 2004.

[7] A. Krishnamurthy, R. Suri, , and M. Vernon, "Two-moment approximations for throughput and mean queue length of a fork/join station with general input process," *Stochastic modeling and optimization of manufacturing systems and supply chains (Editors: Shantikumar, J.G. and Yao, D.D. and Zijm, W.H.M.) Kluwer Academic Publishers*, pp. 87–126, 2003.

[8] A. Krishnamurthy and R. Suri, "Performance analysis of single stage kanban controlled production systems using parametric decomposition," *Queuing Systems: Theory and Applications (under review)*, 2004.

[9] S. M. Ryan and F. Choobineh, "Total wip and wip mix for a conwip controlled job shop," *IIE Transactions*, vol. 35, pp. 405–418, 2003.

[10] K. Satyam, A. Krishnamurthy, and M. Kamath, "Node decomposition based approaches for multi-class closed queuing networks," *Technical Report-Decision Sciences and Engineering Systems*, 2005.

[11] W. Whitt, "The queuing network analyzer," *The Bell System Technical Journal*, vol. 62, pp. 2779–2815, 1983.

[12] www.promodel.com.